CTDC/6

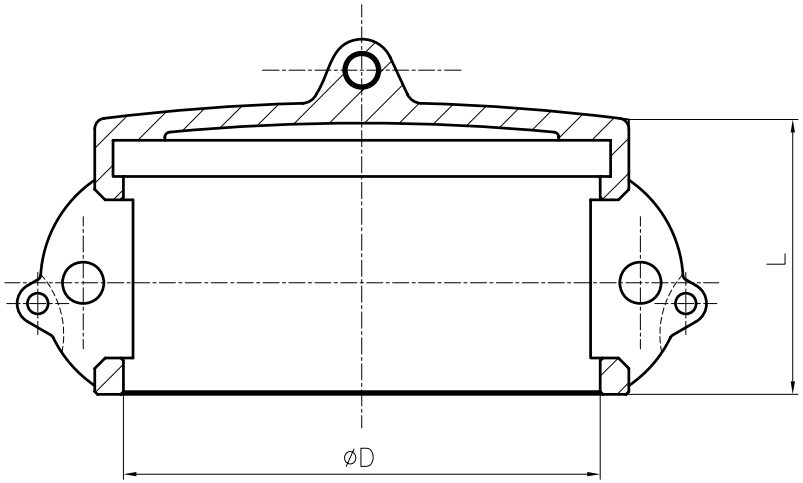

NPS	½″	¾″	1″	1 ¼″	1 ½″	2″	2 ½″	3″	4″	6″
D	1.043	1.280	1.465	1.811	2.126	2.500	3.012	3.622	4.724	6.929
L	1.673	1.220	1.496	1.713	1.850	2.047	2.126	2.087	2.165	2.283
Weight(lb)	0.331	0.331	0.485	0.882	1.069	1.257	1.797	2.222	3.735	7.297

MARK	BEFORE MODIFIED	AFTER MODIFIED	DATE
DRA.		APP.	
CHK.		DATE	

ANIX®

ANIX VALVE CO.,LTD

Camlok Type DC,316

SCALE

CTDC/6